REV.	DESCRIPTION	DATE

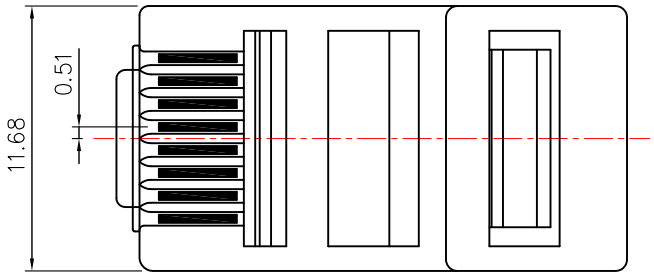

NOTE:

A. Material:
1. Housing : PC , UL94V-2 / UL94V-0.
2. Terminal : Copper Alloy.

B. Plating:
1.Terminal : Plating is based on 50u" Nickel Under Plating.
Selective Gold Plated on Contact Touch Area.

C. Applicable Wire Gauge : 24~26AWG OD: 5~6.5mm

D. Operation Temperature : -40°C to 125°C

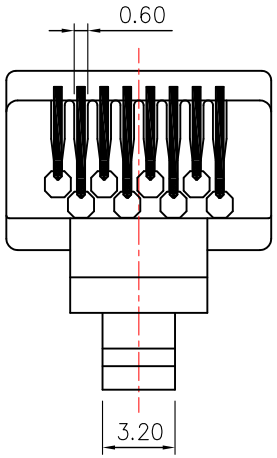

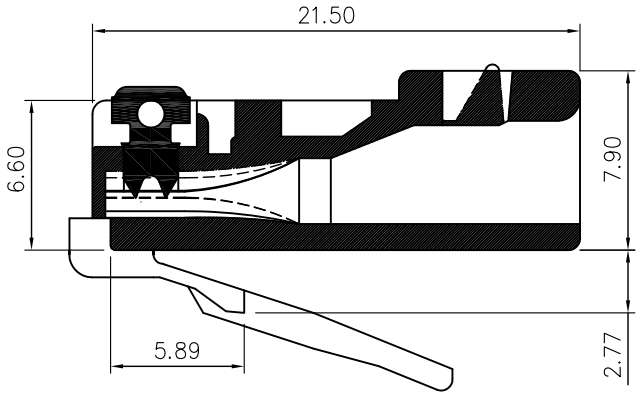

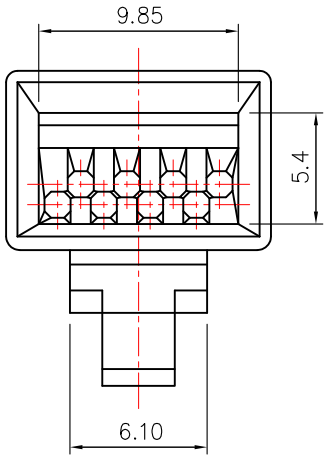

Round Cable

MOD - 688X - R - XXu" - V

- 688X: Terminal Type : 1: 2 Prongs; 3: 3 Prongs
- R: Cable Type : R: Round Cable
- XXu": Plating Option : GFu", 6u", 15u", 30u", 50u"
- V: UL94V-0

TREMINAL

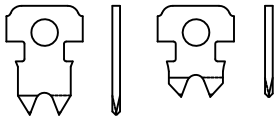

2 Prongs For Stranded Wire
多芯線用二叉金片

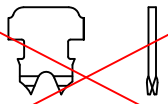

2 Prongs For Solid Wire
單芯線用二叉金片

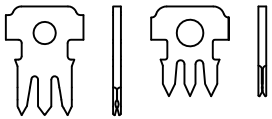

3 Prongs For Solid Wire
單芯線用三叉金片

TOLERANCE	DRAWER	SunLight 日亮電子科技有限公司 Sun-Light Electronic Technologies Inc.	
.X ±0.250 .XX ±0.150 .XXX±0.100	CHECK Shi Tung Liu		
	DESIGNED Chin Chun Liu	NAME Modular Plug RJ45 Cat.6 8P8C	
UNITS : mm	APPROVAL Haw Feng Liu		
	DATE 02 / 23 / 2002	PART NO. MOD-688X-R-XXu"	DRAW NO. MOD-688X
SCALE 3 : 1	SIZE A4	SHEET 1 OF 1	REV. C